Utek

indoor air quality and energy saving

TECHNICAL DATA

UNIT	CONTROL	ENERGETIC CLASS
BREVA-TOP	EVO-LIGHT	B
	EVO-LIGHT BMS	B

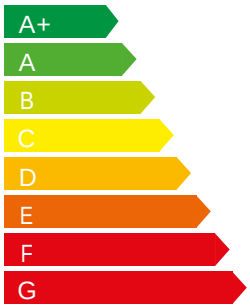

BREVA TOP

HEAT RECOVERY VENTILATION UNITS for RESIDENTIAL BUILDINGS

BREVA-TOP
High efficiency heat recovery ventilation unit with double flow for residential buildings

EQUIPPED

It is equipped with an aluminum counterflow heat exchanger. EC backward curved centrifugal fans allow the BREVA-TOP to reach a maximum capacity of about: 267 m³/h a 100 Pa with 170 Watt power consumption. Partial By-pass.

STRUCTURE

BREVA-TOP is made with a EPP structure, material that ensures a high degree of thermal insulation towards the outside and between the air flows. Access to the filters ePM1 55% (ex F7) and ePM10 50% (ex G4) is particularly easy thanks to two special openings located on the inspection panel. BREVA-TOP can be installed in ambient with temperature between 0° C and 45° C, can have floor or ceiling insta lation.

CONTROLS

For quick installation, BREVA-H is supplied complete with a control system and connection to the power supply network. The version with EVO-LIGHT control

The EVO-LIGHT control has a colorful touch screen interface, it gives an intuitive operating status of the unit and it allows programming the fan speed. This control has a weekly time schedule for automatic fans, it can be controlled by an external switch to activate the booster and it can automatically adjust the air flow when connected to an air quality sensor. an manage any air post-treatment accessories (duct), automatically manages the by-pass and prevents frosting of the heat exchanger by managing the speed of the fans or, if installed, an electric preheating resistance (optional accessory inside the machine); warns the user of the need to replace the filters (the clogging status of the filters is monitored by hour counter with factory calibration) or the onset of an anomaly, indicating its origin; manages the anti-ice. With the addition of optional accessories (COP Kit or CAV Kit, installed in the duct) it is possible to manage the ventilation machine in constant pressure or constant flow mode.

For a more complete view of the characteristics of the control panels, please read the specific manuals

Aluminum counter-current heat exchanger produced by RECUTECH; RECUTECH participates in the Eurovent certification program

STANDARD CONFIGURATION

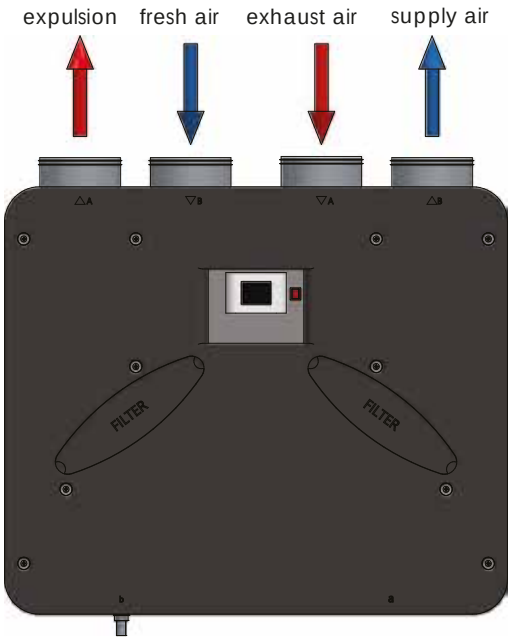

PERFORMANCES (UNI EN 13141-7)

The unit must be ducted properly: UTEK authorizes the use only according to its performance diagram shown into this catalogue

The declared performances are with CLEAN filters and guaranteed ONLY with the original filters UTEK low pressure drop.

BREVA TOP

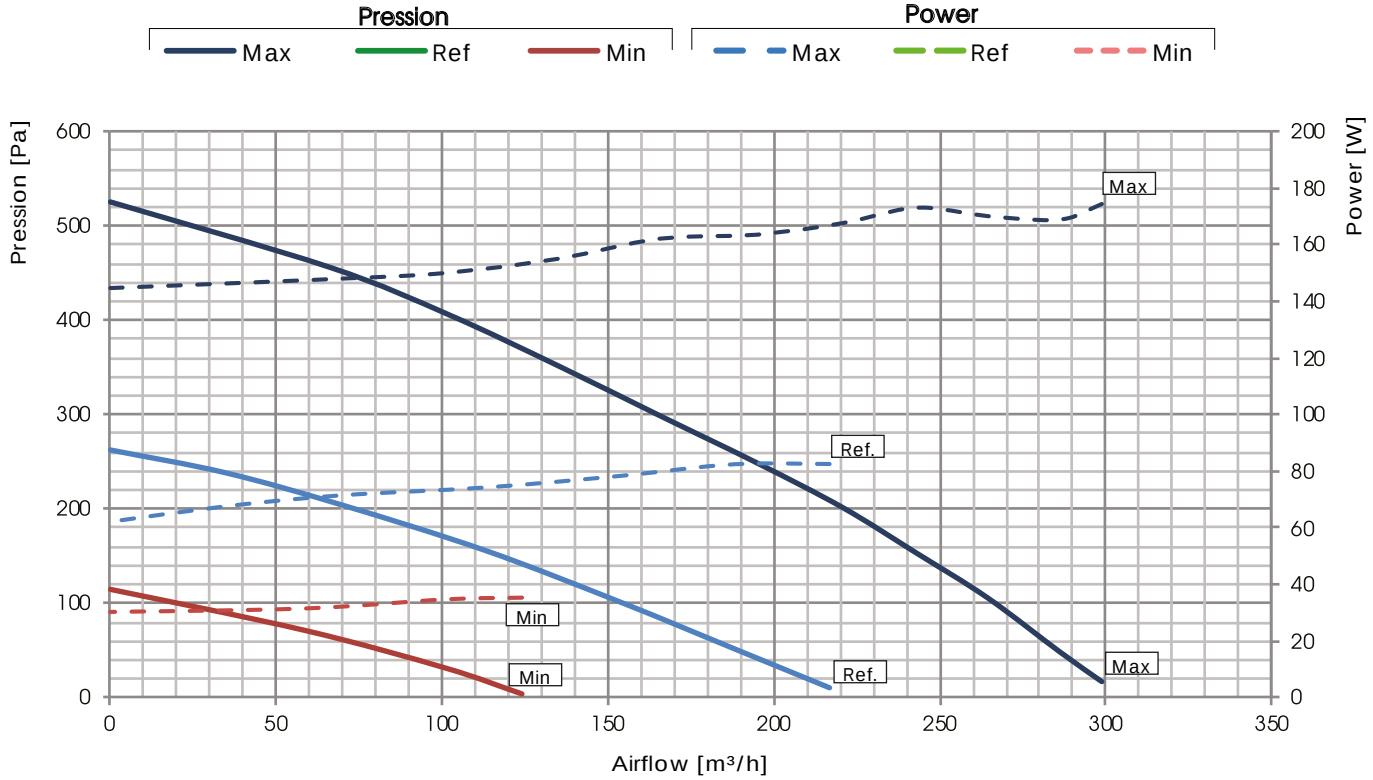

HEAT RECOVERY PERFORMANCE (sensible efficiency)

Values refered to the following conditions (UNI EN 13141-7): Tbs external air 7°C; U.R. esternal 72%; Tbs enviorment 20°C; U.R. enviorment 38%

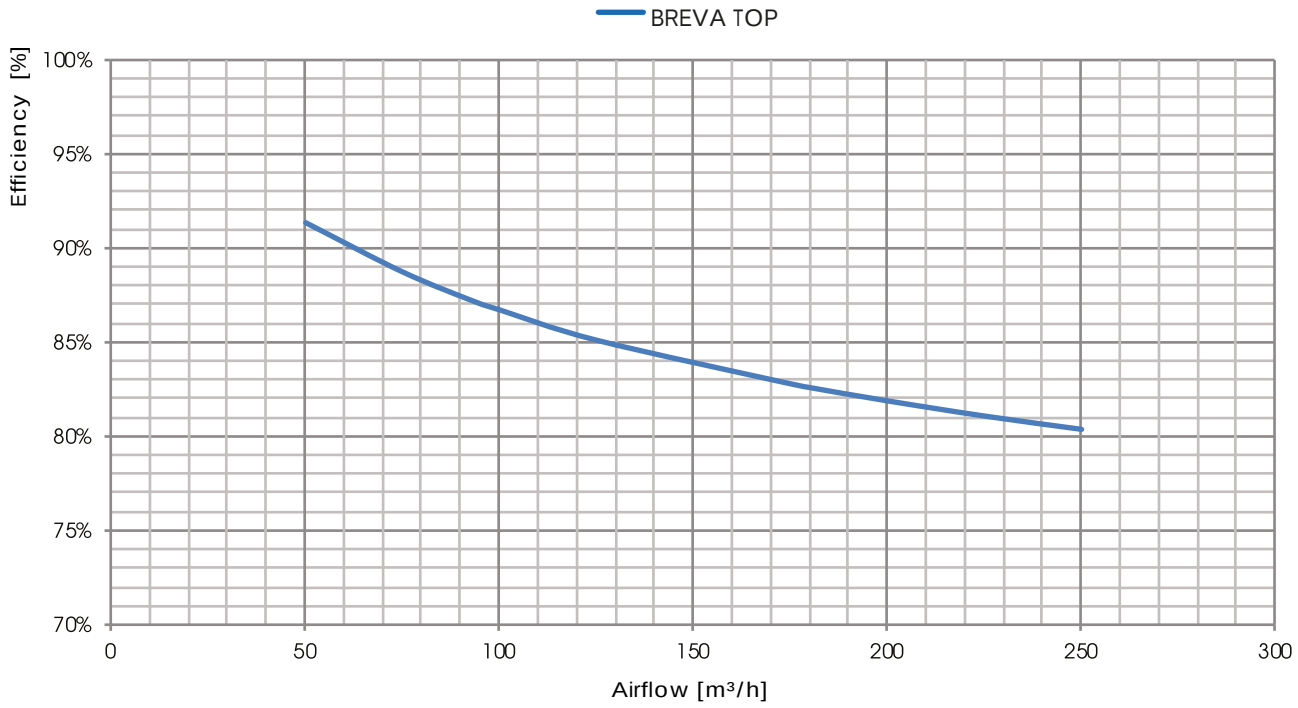

TEST LEAKAGE FLAT according UNI EN 13141-7

LEAKAGE	TEST CONDITIONS	BREVA TOP CLASS
OUTDOOR	Positive pression 250 Pa	A3
OUTDOOR	Negative pression 250 Pa	A2
INDOOR	Pressure difference100 Pa	A3

NOISE LEVEL

Lw Sound power level taken in accordance to UNI EN ISO 3747 CLASS 3

	NOISE FROM THE CASE (dB)							
BREVA TOP unit	125 Hz	250 Hz	500 Hz	1000 Hz	2000 Hz	4000 Hz	8000 Hz	L_w dB(A)
MAX	51,5	61,4	63,3	56,2	47,2	41,1	42,5	62,4
REF	48,7	59,2	53,5	50,0	41,4	36,1	38,7	55,5

	NOISE IN THE DUCTS (dB)							
BREVA TOP unit	125 Hz	250 Hz	500 Hz	1000 Hz	2000 Hz	4000 Hz	8000 Hz	L_w dB(A)
MAX	57,2	68,1	69,8	62,0	54,5	53,3	56,1	69,1
REF	54,1	64,5	59,8	56,9	47,8	43,4	47,1	61,7

ELECTRICAL DATA

UNIT	FAN				UNIT BREVA TOP	
	Power*[W]	Supply	Courrent max.[A]	Insulation class	Supply	Courrent max.[A]
BREVA TOP 2	2 X 85	230 V, 50/60 Hz 1F	2 X 0,75	IP 54 classe B	230 V, 50 Hz 1F	1,6

(*) Fan data, it's referred to the global absorbed power graph of the machine in the working point

DIMENSIONS (mm) WEIGHT (kg)

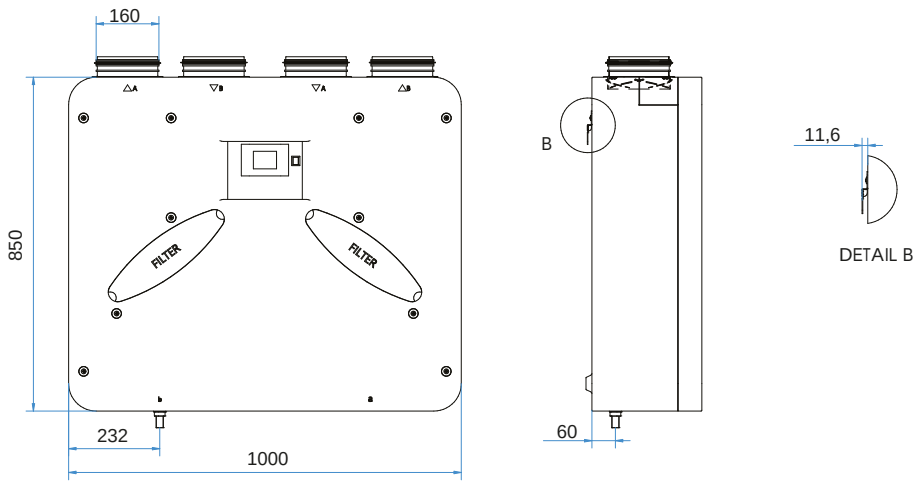

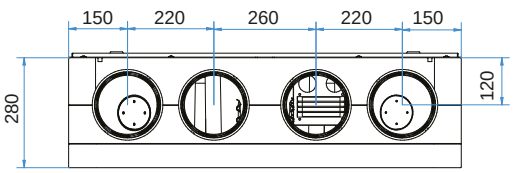

WALL INSTALLATION

Minimum required space for maintenance [mm]

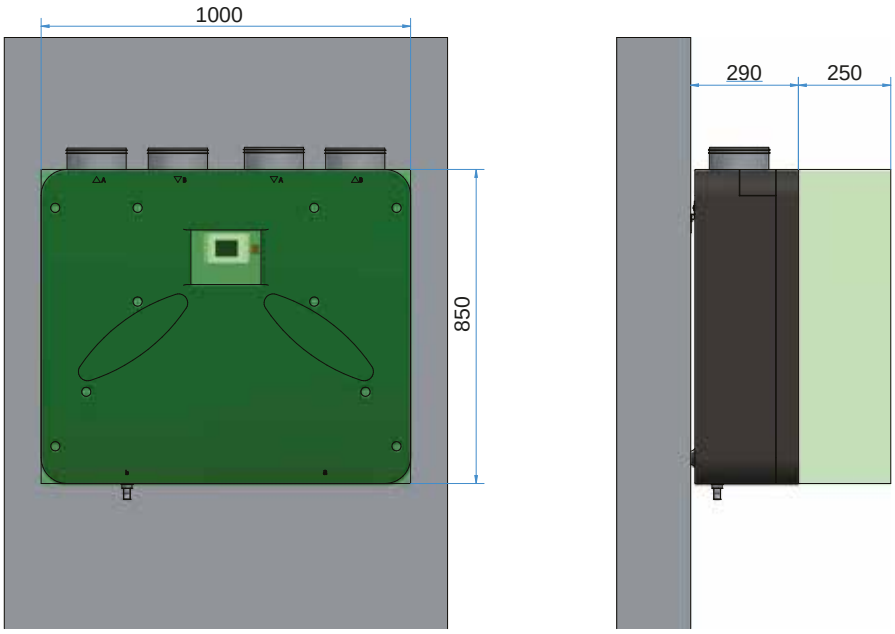

A	Manufacturer's name C.L.A. S.r.l		
B	Manufacturer's model identifier		BREVA-TOP EVO-LIGHT
C	Specific energy consumption (SEC) [kWh/m².a]	COLD	-67,4
		TEMPERATE	-30,9
		WARM	-7,4
	SEC class		B
D	Declared typology		UVR - UVB
E	Type of drive installed		Variable speed
F	Type of heat recovery system		Recovery
G	Thermal efficiency of heat recovery [%]		82,6%
H	Maximum flow rate [m³/s]		0,074
I	Electrical power input at maximum flow rate [W]		170
I	Sound power level [Lwa][dB]		55,5
K	Reference flow rate [m³/s]		0,052
L	Reference pressure difference [Pa]		50
M	SPI [W/m³/h]		0,437
N	Control factor CLTR		0,95
	Control typology		Manual control (no DCV)
O	Declared maximum internal / external leakage rates [%]		9 / 8.5
P	Mixing rate of non-ducted bidirectional ventilation units [%]		-
Q	Position and description of visual filter warning for RVUs intended for use with filters, including text pointing out the importance of regular filter changes for performance and energy efficiency of the unit		The filter alarm is signaled on the Control System display: the intermittent "Dirty Filters" message will appear. "To maintain the energy efficiency of the UVR, it is recommended to replace the filters when reported." The writing is positioned near the filter inspection
R	For unidirectional ventilation systems, instructions to install regulated supply/exhaust grilles in the façade for natural air supply/extraction		
S	Internet address for pre-/dis-assembly instructions		www.utek-air.it
T	For non-ducted units only: the airflow sensitivity to pressure variations at + 20 Pa and – 20 Pa		
U	For non-ducted units only: the indoor/outdoor air tightness		
V	The annual electricity consumption (AEC) [kWh/a]		539
W	The annual heating saved (AHS) for each type of climate [kWh/a]		1978 (WARM)
			8557 (COLD)
			4374 (TEMPERATE)

Dear Customer

Thanks for your attention to the product UTEK , designed and manufactured to ensure the real values to the User : Quality, Safety and Savings on working.

Made in Italy

AZIENDA CON SISTEMA DI GESTIONE QUALITÀ CERTIFICATO DA DNV GL
ISO 9001

AZIENDA CON SISTEMA DI GESTIONE AMBIENTALE CERTIFICATO DA DNV
ISO 14001

CLA & UTEK reserves the right to at any time the necessary changes to improve products without prior notice .

the Dealer

BREVA-TOP_2022_2_EN

C.L.A. S.r.l. Via Strada Artigianale Angelo Lapsus 310, 23036 San Giacomo di Teglio (So) Italy Tel.+39 0342 786116 | utek-air.it | cla-air.it